© 2026 Unity Reliance (M) Sdn Bhd. All rights reserved. Unauthorised reproduction, or use for other brands, is prohibited.

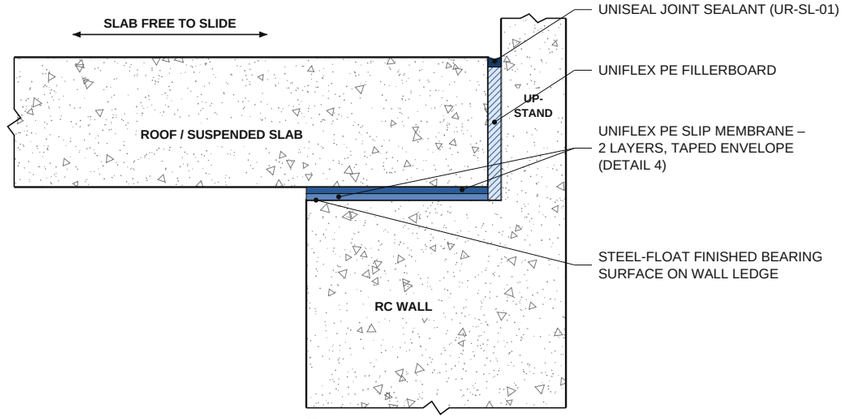

1 SLAB ON WALL LEDGE

SLIDING BEARING – NOT TO SCALE

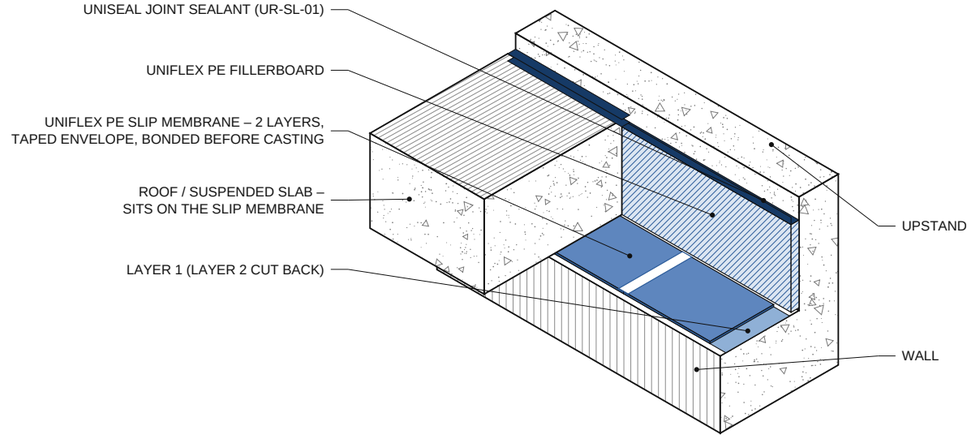

2 SLAB ON WALL LEDGE

3D VIEW OF DETAIL 1 – NOT TO SCALE

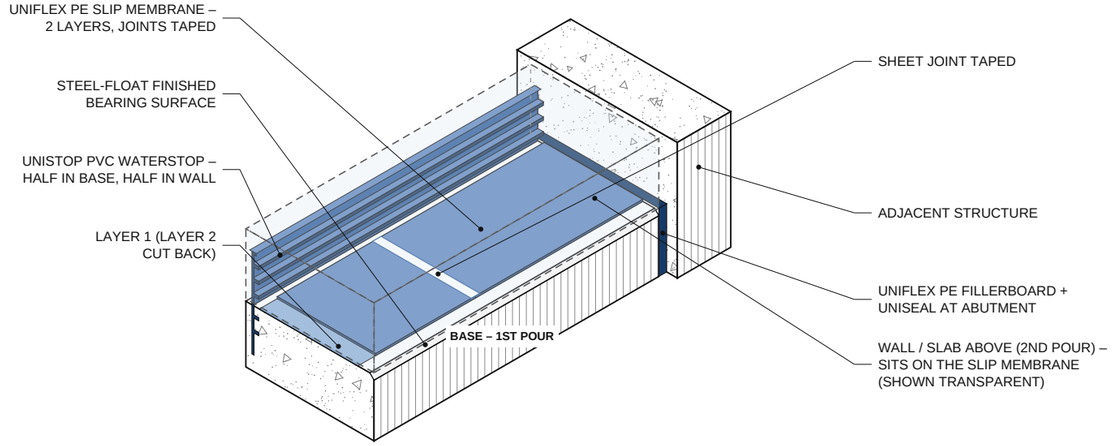

3 SLIP MEMBRANE ON BASE

3D VIEW – NOT TO SCALE

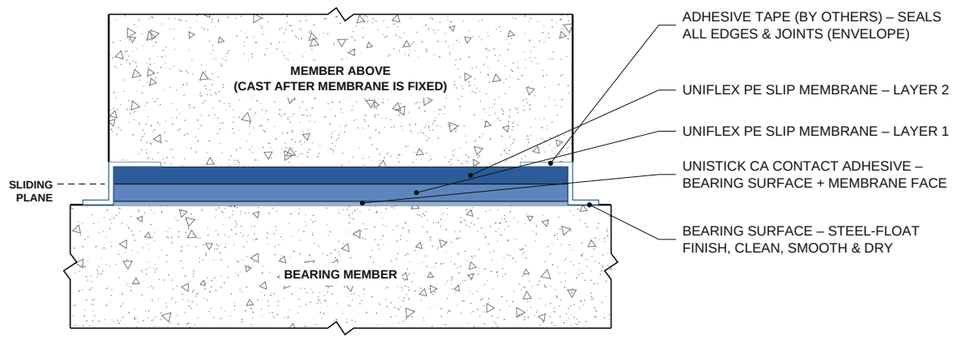

4 SLIP MEMBRANE ENVELOPE

ENLARGED SECTION – THICKNESS EXAGGERATED

UNIFLEX PE SLIP MEMBRANE (REFER TO TDS)

Material	Closed-cell polyethylene (PE), black
Size	300mm wide x 2m long strips
Thickness	2 – 3mm
Static coeff. of friction	0.140 (BS EN ISO 8295)
Dynamic coeff. of friction	0.120 (BS EN ISO 8295)
Density	160 – 200 kg/m³ (ISO 845)
Bonding	UNISTICK CA contact adhesive

LEGEND

- Concrete
- UNIFLEX PE slip membrane – layer 2
- UNIFLEX PE slip membrane – layer 1
- UNISTICK CA contact adhesive
- Adhesive tape (by others)
- UNIFLEX PE fillerboard
- UNISEAL joint sealant
- UNISTOP PVC waterstop

GENERAL NOTES (FOR GUIDANCE ONLY)

1. The slip membrane lets the member above slide on its bearing (thermal, shrinkage, prestress movement). Bearing load, bearing width, joint layout and waterstop type are as per engineer – do not exceed the safe load bearing capacity (TDS).
2. Bearing surface: steel-float finish, clean, smooth, dry and free from contaminants.
3. Normally used as two layers to give a low-friction sliding interface. Stagger joints between layers wherever possible.
4. Form the strips into a closed envelope: seal all edges and staggered joints with adhesive tape before concreting so fines and grout cannot get between the layers.
5. Bond to the bearing surface with UNISTICK CA: coat the bearing surface and one face of the membrane, when touch-dry place it carefully and roll well for full contact.
6. Strips 300mm x 2m: butt sheet joints and tape them; stagger joints between layer 1 and layer 2. Circular structures (e.g. tanks): form in short chord lengths with staggered joints.
7. Detail 1: fillerboard and sealant at the slab edge let the slab expand against the upstand. Sealant sizing as UR-SL-01.

UNITY RELIANCE

UNITY RELIANCE (M) SDN BHD
135B, Jalan Kip 8, Kawasan Perindustrian Kepong,
52200 Kuala Lumpur, Malaysia
T: 03-6734 7941 | M: 010-785 1159
unityreliance88@gmail.com | www.unityreliance.com

DISCLAIMER – FOR ILLUSTRATION ONLY, NOT FOR CONSTRUCTION

This drawing is a generic product illustration. It is NOT an engineering design and has not been prepared, checked or endorsed by a professional engineer. Unity Reliance (M) Sdn Bhd is a product supplier, not a design consultant. All sizes, bedding thickness, edge distances, reinforcement, dowels and installation details shall be designed, verified and approved by the project's qualified engineer. Unity Reliance (M) Sdn Bhd accepts no responsibility for structural design, site conditions, workmanship, or any loss or damage arising from the use of this drawing. Product supply is governed by the relevant TDS and terms of sale.

REVISIONS

REV	DATE	DESCRIPTION
0	29/10/26	FIRST ISSUE

PRODUCT
UNIFLEX PE SLIP MEMBRANE
UNISTICK CA / UNIFLEX PE / UNISEAL
UNISTOP PVC WATERSTOP

DRAWING TITLE
UNIFLEX PE SLIP MEMBRANE – TYPICAL SLIDING JOINT DETAILS

DRAWING NO.
UR-FL-03

REV
0

SCALE	SIZE	DATE	DRAWN
NTS	A3	29/10/26	UR

FOR ILLUSTRATION ONLY NOT FOR CONSTRUCTION