© 2026 Unity Reliance (M) Sdn Bhd. All rights reserved. Unauthorised reproduction, or use for other brands, is prohibited.

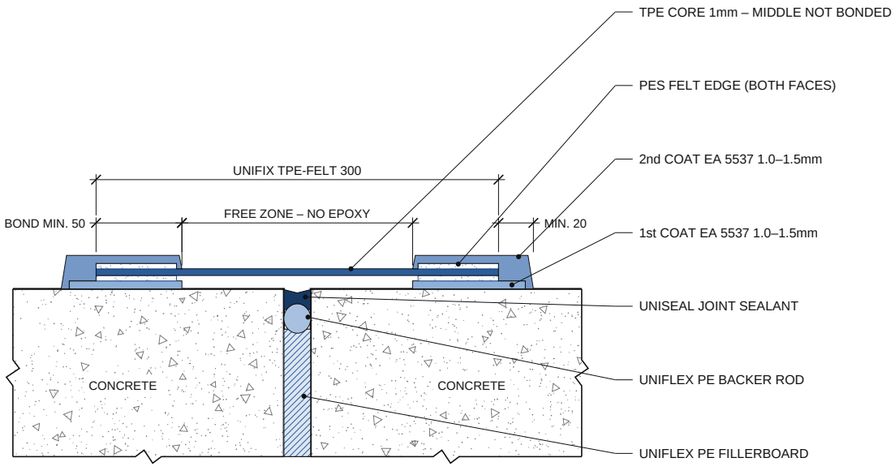


## 1 FLOOR EXPANSION JOINT

SECTION – LAYERS EXAGGERATED

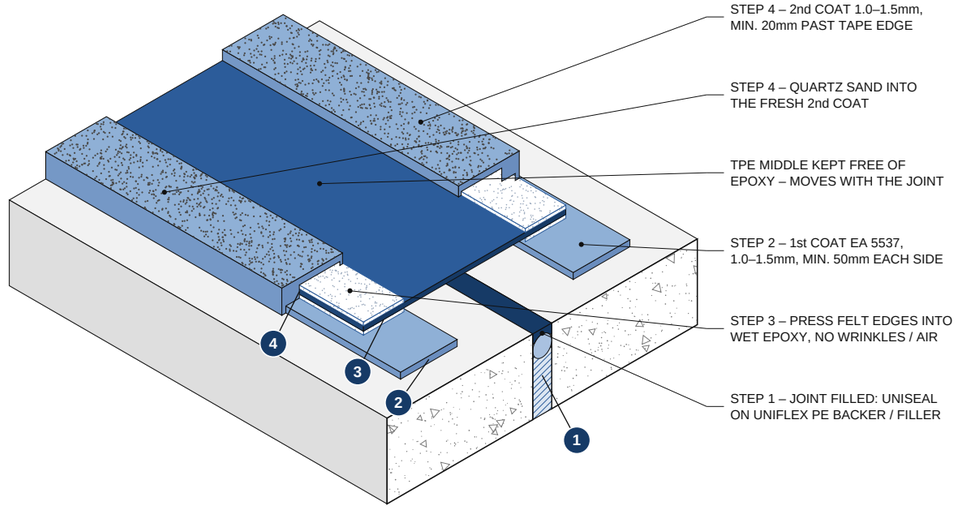


## 2 TAPE BUILD-UP

3D VIEW – STEPS AS DETAIL 5, LAYERS CUT BACK

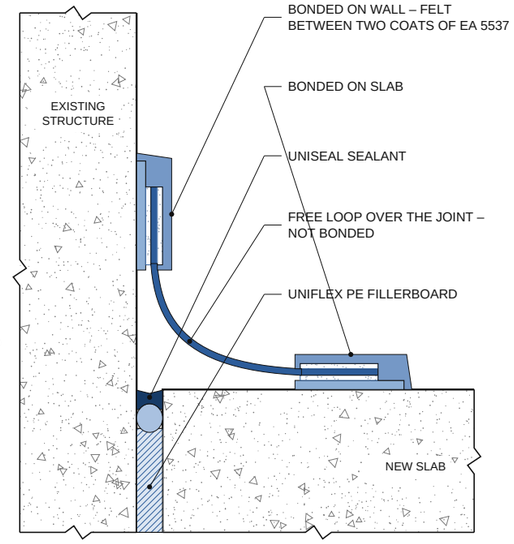


## 3 JUNCTION OF STRUCTURES

SECTION – WALL / SLAB EXPANSION JOINT

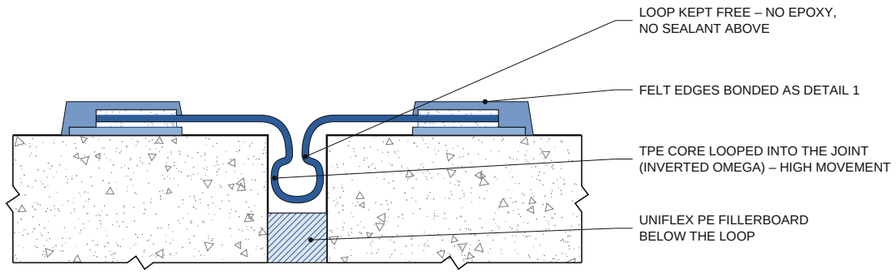


## 4 INVERTED OMEGA LOOP

SECTION – WHERE HIGH MOVEMENT IS EXPECTED

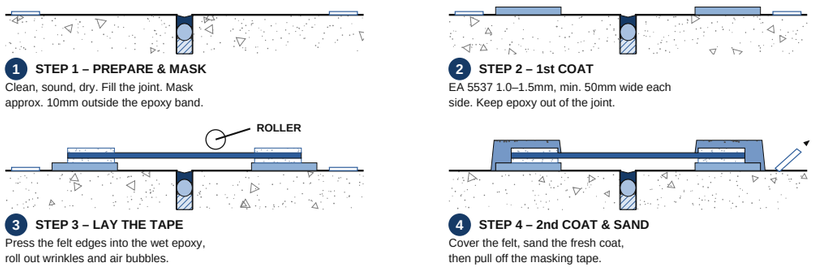


**1 STEP 1 – PREPARE & MASK**
Clean, sound, dry. Fill the joint. Mask approx. 10mm outside the epoxy band.

**2 STEP 2 – 1st COAT**
EA 5537 1.0–1.5mm, min. 50mm wide each side. Keep epoxy out of the joint.

**3 STEP 3 – LAY THE TAPE**
Press the felt edges into the wet epoxy, roll out wrinkles and air bubbles.

**4 STEP 4 – 2nd COAT & SAND**
Cover the felt, sand the fresh coat, then pull off the masking tape.

## 5 INSTALLATION SEQUENCE

SECTIONS – NOT TO SCALE

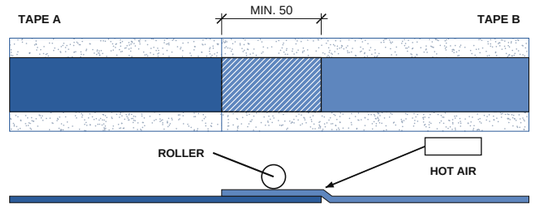


OVERLAP MIN. 50mm, HOT-AIR WELD THE TPE CORE, THEN PRESS WITH A FLAT ROLLER. NO EPOXY IN THE SPLICE (TDS).

## 6 SPLICING THE TAPE

PLAN & SECTION

### UNIFIX TPE-FELT (REFER TO TDS)

| PROPERTY | VALUE |
|---|---|
| **Thickness (DIN EN 1849-1)** | 1.0mm |
| **Size** | 300mm x 25m / roll |
| **Tensile T / L (EN-ISO 527-3)** | 4.7 / 4.8 MPa |
| **Elongation T / L** | 580 / 532% |
| **Tear T / L (EN-ISO 12310-2)** | 48 / 42 N/mm |
| **Hardness (ISO 868)** | 70 Shore A |
| **Water pressure (EN 1928)** | > 5 bar |
| **Service temperature** | -30 / +80°C |
| **Application temperature** | 5 – 55°C |

### UNISTICK EA 5537 (REFER TO TDS)

| PROPERTY | VALUE |
|---|---|
| **Mixing ratio** | 3.4 : 1.6 by weight |
| **Pack** | 5kg set |
| **Coat thickness** | 1.0 – 1.5mm per coat |
| **Pot life** | 30 min (100g, 28°C) |
| **Drying** | 3 hours at 28°C |
| **Full bond** | Approx. 5 days at 28°C |
| **Application** | 10 – 35°C, dry substrate |
| **Cleaning** | Xylene or M.E.K. |

### GENERAL NOTES (FOR GUIDANCE ONLY)

1. Substrate clean, sound and dry, free of dust, laitance, curing compound, oil and grease. Remove paint or coatings by grinding. Repair defects with a concrete repair mortar.
2. Fill the joint with suitable mastic before taping (UNIFLEX PE fillerboard / backer rod + UNISEAL sealant).
3. Mask both sides approx. 10mm outside the epoxy band. Mix UNISTICK EA 5537 with a low-speed mixer until uniform – use full sets; do not thin. Trowel 1.0 – 1.5mm, min. 50mm wide each side. No epoxy in the joint.
4. Lay UNIFIX TPE-FELT on the wet epoxy, press the felt edges in and roll out wrinkles and air bubbles. Keep the TPE middle over the joint free of epoxy so it can move.
5. 2nd coat 1.0 – 1.5mm over the felt while the 1st coat is fresh, at least 20mm past the tape edge. Broadcast quartz sand into the fresh coat where screed or tile adhesive follows. Remove the masking tape.
6. Splices: overlap min. 50mm, hot-air weld the TPE core and roll flat. Epoxy cannot be used for splicing.
7. High movement: loop the TPE core into the joint (inverted omega, Detail 4). Joint size and movement by engineer.
8. Do not move, load or wet the tape until the epoxy has cured (full bond approx. 5 days at 28°C). Protect from rain, traffic and damage; cure is slower in cold weather and faster in hot weather.

### LEGEND

- TPE CORE
- PES FELT EDGE
- UNISTICK EA 5537
- QUARTZ SAND
- UNISEAL SEALANT
- UNIFLEX PE FILLERBOARD
- UNIFLEX PE BACKER ROD
- MASKING TAPE
- CONCRETE (BY OTHERS)

**UNITY RELIANCE (M) SDN BHD**
135B, Jalan Kip 8, Kawasan Perindustrian Kepong,
52200 Kuala Lumpur, Malaysia
T: 03-6734 7941 | M: 010-785 1159
unityreliance88@gmail.com | www.unityreliance.com

**DISCLAIMER – FOR ILLUSTRATION ONLY, NOT FOR CONSTRUCTION**

This drawing is a generic product illustration. It is NOT an engineering design and has not been prepared, checked or endorsed by a professional engineer. Unity Reliance (M) Sdn Bhd is a product supplier, not a design consultant. All sizes, bedding thickness, edge distances, reinforcement, dowels and installation details shall be designed, verified and approved by the project's qualified engineer. Unity Reliance (M) Sdn Bhd accepts no responsibility for structural design, site conditions, workmanship, or any loss or damage arising from the use of this drawing. Product supply is governed by the relevant TDS and terms of sale.

**REVISIONS**

| REV | DATE | DESCRIPTION |
|---|---|---|
| 0 | 29/10/26 | FIRST ISSUE |
| A | 30/10/26 | SEALANT ON BACKER ROD |

PRODUCT
**UNIFIX TPE-FELT EXPANSION JOINT TAPE**
**UNISTICK EA 5537 EPOXY ADHESIVE**
**UNISEAL SEALANT / UNIFLEX PE**

DRAWING TITLE
**UNIFIX TPE-FELT EXPANSION JOINT TAPE BONDED WITH UNISTICK EA 5537**

DRAWING NO.
**UR-FX-03**

REV
**A**

| SCALE | SIZE | DATE | DRAWN |
|---|---|---|---|
| NTS | A3 | 30/10/26 | UR |

**FOR ILLUSTRATION ONLY NOT FOR CONSTRUCTION**