© 2026 Unity Reliance (M) Sdn Bhd. All rights reserved. Unauthorised reproduction, or use for other brands, is prohibited.

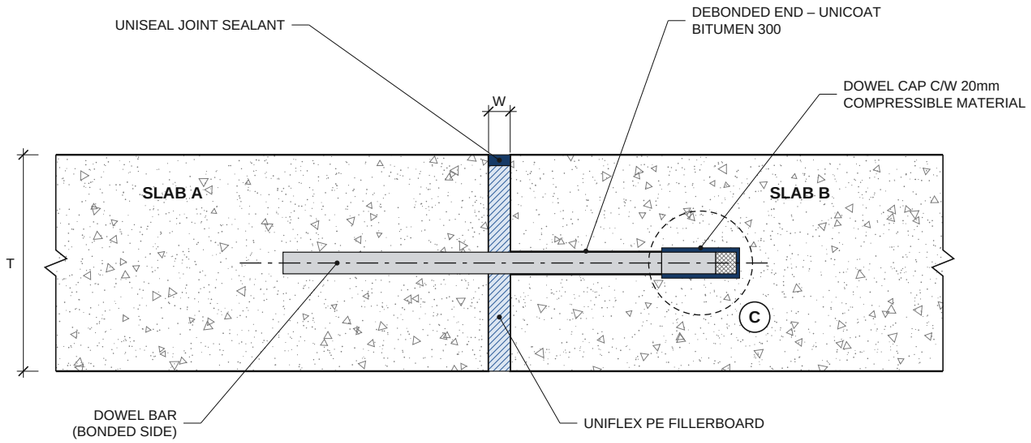

1 SLAB EXPANSION JOINT

DOWEL CAP C/W COMPRESSIBLE MATERIAL – NOT TO SCALE

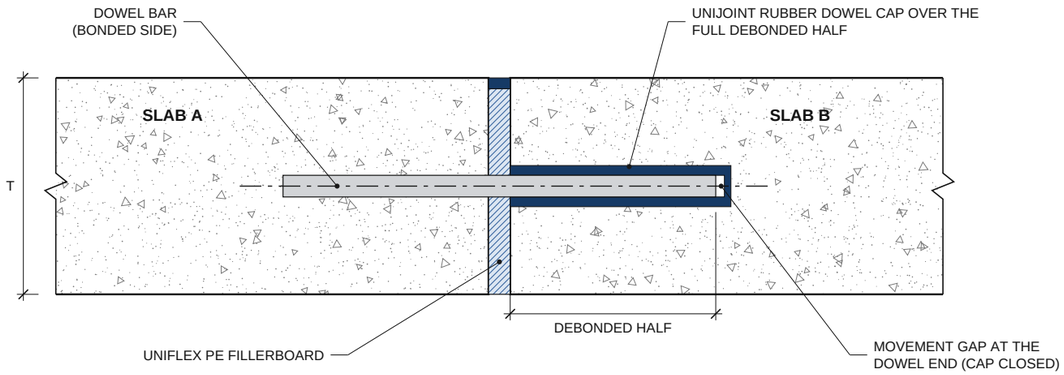

3 SLAB EXPANSION JOINT

RUBBER DOWEL CAP OVER THE FULL DEBONDED LENGTH – NOT TO SCALE

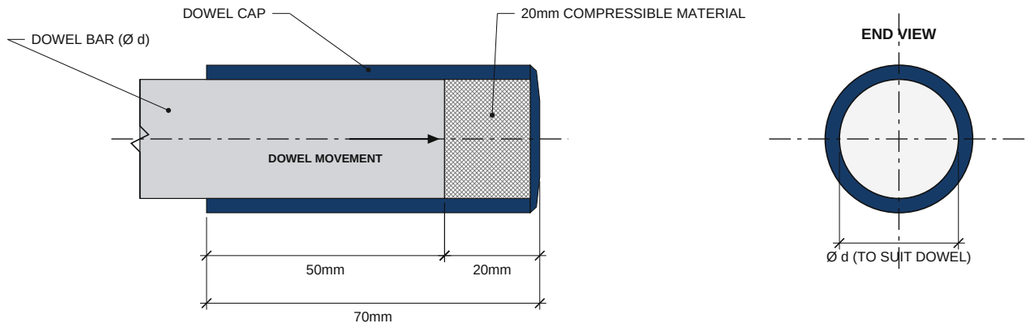

C DOWEL CAP C/W COMPRESSIBLE MATERIAL

PRODUCT DETAIL – NOT TO SCALE

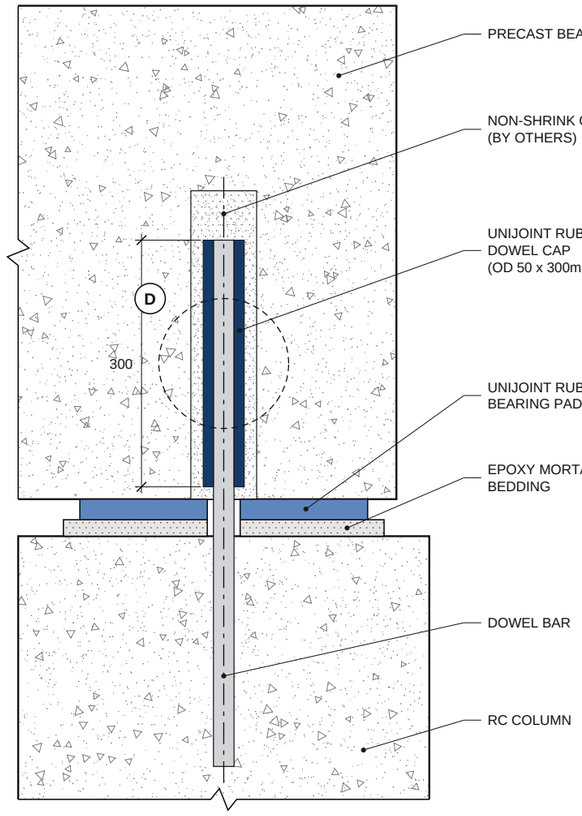

2 PRECAST BEAM DOWEL AT BEARING

UNIJOINT RUBBER DOWEL CAP – NOT TO SCALE

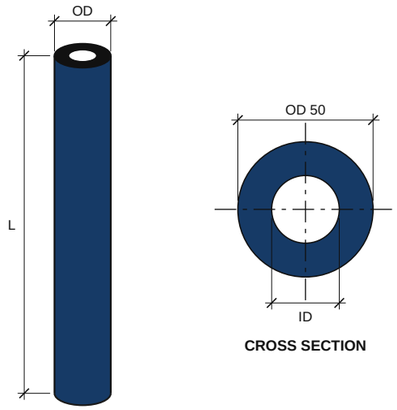

D UNIJOINT RUBBER DOWEL CAP

PRODUCT DETAIL (REFER TDS) – NOT TO SCALE

STANDARD SIZES (TDS TABLE 2.0)

INNER DIA.	OUTER DIA.	LENGTH
25 mm	50 mm	300 mm
32 mm	50 mm	300 mm
40 mm	50 mm	300 mm
42 mm	50 mm	250 mm

Custom sizes available on request.

LEGEND

- Concrete (cut)
- Steel dowel bar
- Rubber dowel cap
- Compressible material
- UNIFLEX PE fillerboard
- UNISEAL joint sealant
- UNIJOINT rubber bearing pad
- Epoxy mortar bedding
- Non-shrink grout (by others)

GENERAL NOTES (FOR GUIDANCE ONLY)

1. Dowel diameter, length, spacing and embedment as per structural design.
2. Dowels to be aligned parallel to the slab surface and perpendicular to the joint.
3. Debonded end coated with UNICOAT BITUMEN 300 and fitted with the dowel cap. Compressible length to suit the design joint movement.
4. Rubber dowel cap inner diameter to match the dowel bar; refer to TDS Table 2.0.
5. Pocket size, grout, bearing pad and bedding details as per engineer.
6. Detail 3 alternative: UNIJOINT rubber dowel cap over the whole debonded half. Cap length to suit the dowel and joint movement.

UNITY RELIANCE (M) SDN BHD
135B, Jalan Kip 8, Kawasan Perindustrian Kepong,
52200 Kuala Lumpur, Malaysia
T: 03-6734 7941 | M: 010-785 1159
unityreliance88@gmail.com | www.unityreliance.com

DISCLAIMER – FOR ILLUSTRATION ONLY, NOT FOR CONSTRUCTION

This drawing is a generic product illustration. It is NOT an engineering design and has not been prepared, checked or endorsed by a professional engineer. Unity Reliance (M) Sdn Bhd is a product supplier, not a design consultant. All sizes, bedding thickness, edge distances, reinforcement, dowels and installation details shall be designed, verified and approved by the project's qualified engineer. Unity Reliance (M) Sdn Bhd accepts no responsibility for structural design, site conditions, workmanship, or any loss or damage arising from the use of this drawing. Product supply is governed by the relevant TDS and terms of sale.

REVISIONS

REV	DATE	DESCRIPTION
0	29/10/26	FIRST ISSUE
A	30/10/26	DETAIL 3 ADDED

PRODUCT
UNIJOINT RUBBER DOWEL CAP
UNIJOINT DOWEL CAP
(C/W COMPRESSIBLE MATERIAL)

DRAWING TITLE
DOWEL CAP SECTION, DETAIL & INSTALLATION DRAWING

DRAWING NO.
UR-JT-01

REV
A

SCALE	SIZE	DATE	DRAWN
NTS	A3	30/10/26	UR

FOR ILLUSTRATION ONLY
NOT FOR CONSTRUCTION