© 2026 Unity Reliance (M) Sdn Bhd. All rights reserved. Unauthorised reproduction, or use for other brands, is prohibited.

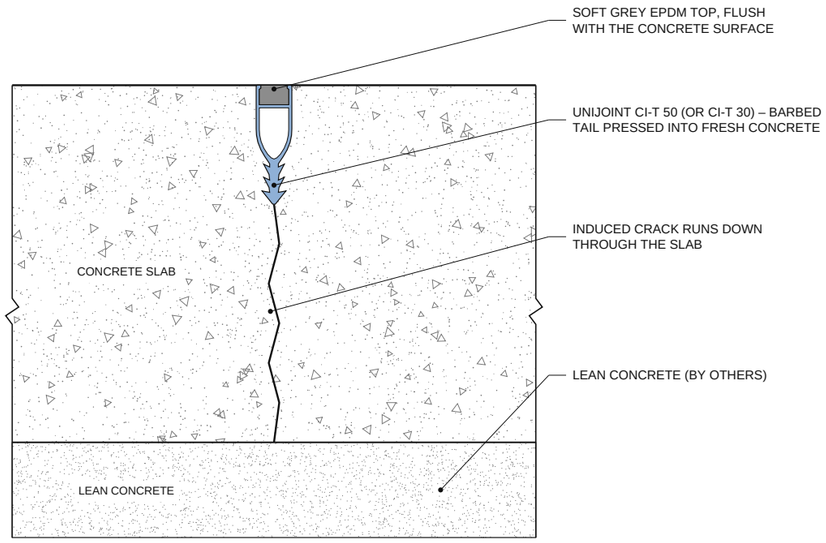

1 TOP CRACK INDUCER CI-T

SECTION – PRESSED INTO FRESH CONCRETE

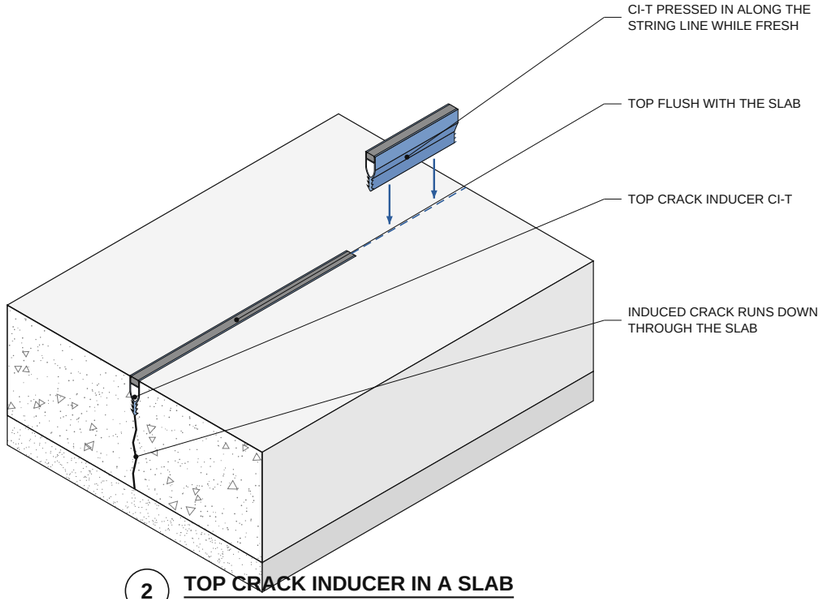

2 TOP CRACK INDUCER IN A SLAB

3D VIEW – TOP CRACK INDUCER CI-T

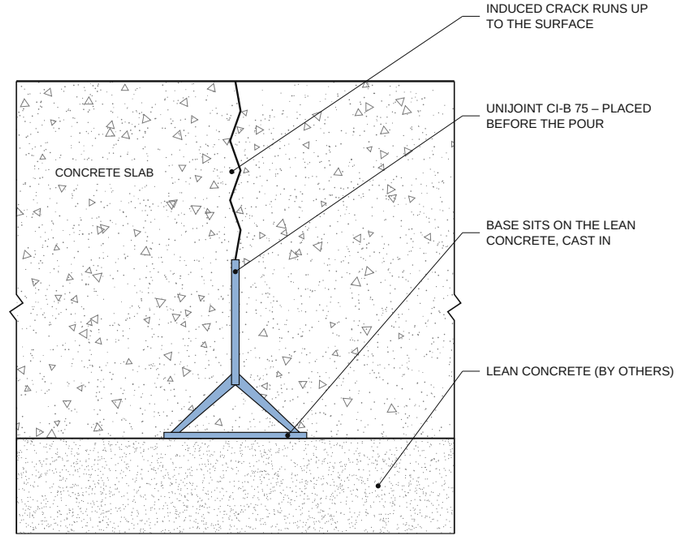

3 BOTTOM CRACK INDUCER CI-B 75

SECTION – CAST INTO THE SLAB

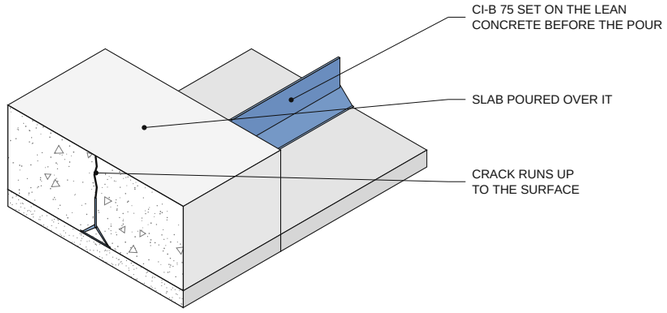

4 BOTTOM CRACK INDUCER

3D VIEW – SET BEFORE THE POUR

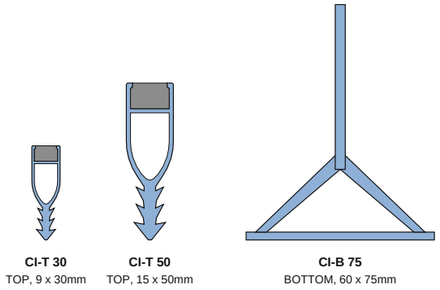

5 PROFILE KEY

CROSS-SECTIONS

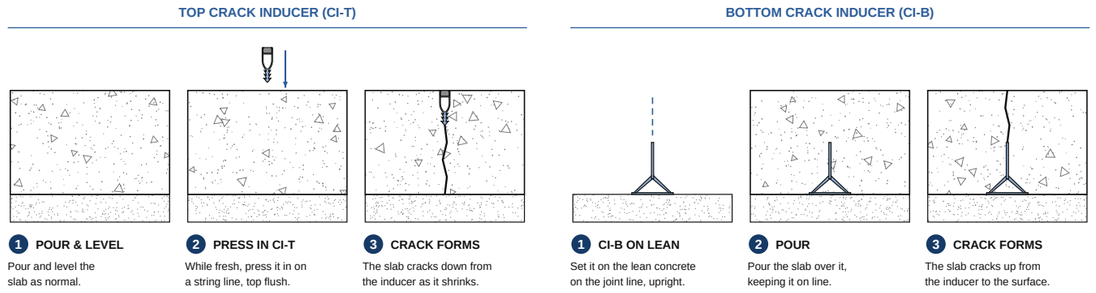

6 INSTALLATION STEPS

USE TOP OR BOTTOM – NOT BOTH

UNIJOINT CI CRACK INDUCER (REFER TO CATALOGUE)

CODE	USE	COLOUR	HEIGHT	WIDTH	LENGTH	PACKING
CI-T 30	Top	Light grey	30mm	9mm	2.5m	50 / box
CI-T 50	Top	Dark grey	50mm	15mm	2.5m	10 / ctn
CI-B 75	Bottom	Dark grey	75mm	60mm	2.5m	10 / ctn

Material: PVC. CI-T head topped with soft grey EPDM, flush with the surface.

GENERAL NOTES (FOR GUIDANCE ONLY)

1. Crack inducers make a planned contraction joint: they weaken the slab along a line so the shrinkage crack forms there instead of at random. Use either a top crack inducer (CI-T) or a bottom crack inducer (CI-B) at a joint – not both.
2. CI-B 75 (bottom): set on the lean concrete along the joint line before pouring, kept upright and on line; it is cast into the slab.
3. CI-T 30 / CI-T 50 (top): press into the fresh concrete along a string line before it sets, top flush with the finished surface.
4. Joint layout, inducer depth and reinforcement across the joint by the consultant. Rule of thumb: inducer depth not less than one quarter of the slab thickness.
5. Not a structural expansion joint – use a purpose-made expansion joint with fillerboard where the slab must expand (see UR-FL-01 / UR-FL-02).

UNITY RELIANCE (M) SDN BHD
135B, Jalan Kip 8, Kawasan Perindustrian Kepong,
52200 Kuala Lumpur, Malaysia
T: 03-6734 7941 | M: 010-785 1159
unityreliance88@gmail.com | www.unityreliance.com

DISCLAIMER – FOR ILLUSTRATION ONLY, NOT FOR CONSTRUCTION

This drawing is a generic product illustration. It is NOT an engineering design and has not been prepared, checked or endorsed by a professional engineer. Unity Reliance (M) Sdn Bhd is a product supplier, not a design consultant. All sizes, bedding thickness, edge distances, reinforcement, dowels and installation details shall be designed, verified and approved by the project's qualified engineer. Unity Reliance (M) Sdn Bhd accepts no responsibility for structural design, site conditions, workmanship, or any loss or damage arising from the use of this drawing. Product supply is governed by the relevant TDS and terms of sale.

REVISIONS

REV	DATE	DESCRIPTION
0	29/10/26	FIRST ISSUE
A	11/11/26	CI-T ACTUAL PROFILE + EPDM TOP
B	13/11/26	CI-T 30 PACKING 50 / BOX

PRODUCT
UNIJOINT CI-T 30 / CI-T 50 TOP CRACK INDUCER
UNIJOINT CI-B 75 BOTTOM CRACK INDUCER

DRAWING TITLE
UNIJOINT CI PVC CRACK INDUCER INDUCED CONTRACTION JOINT IN SLABS

DRAWING NO.
UR-JT-03

REV
B

SCALE	SIZE	DATE	DRAWN
NTS	A3	29/10/26	UR

FOR ILLUSTRATION ONLY NOT FOR CONSTRUCTION