© 2026 Unity Reliance (M) Sdn Bhd. All rights reserved. Unauthorised reproduction, or use for other brands, is prohibited.

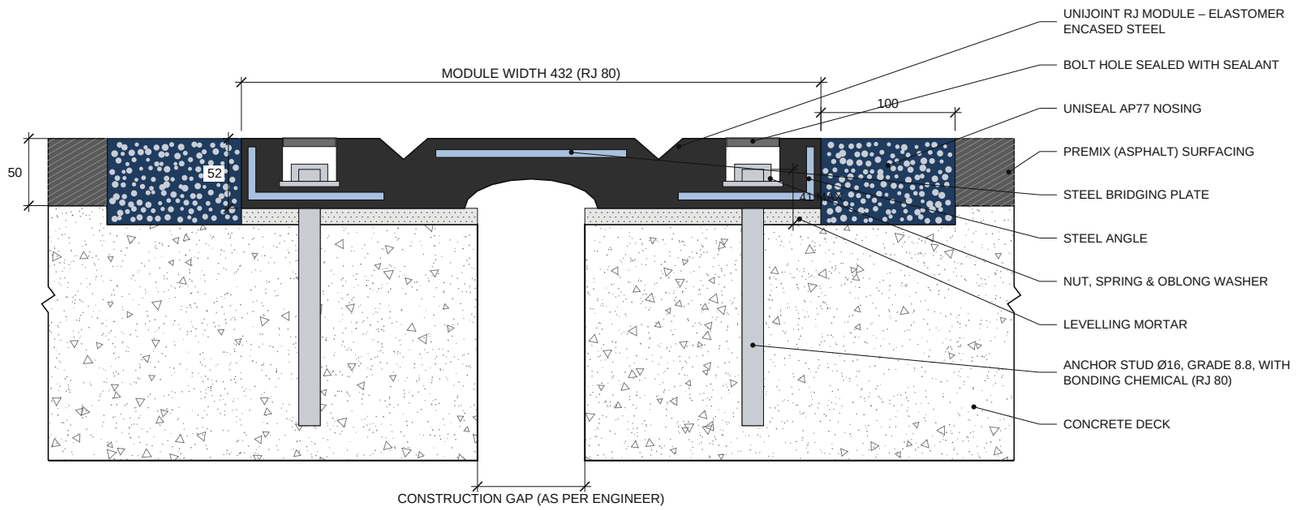

1 UNIJOINT RJ 80 – SECTION

TYPICAL – MODULE BOLTED TO THE DECK EITHER SIDE OF THE JOINT

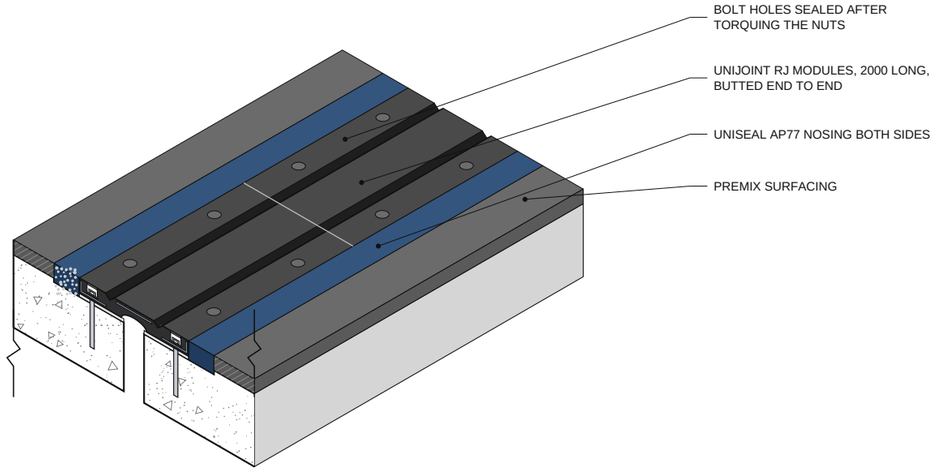

2 UNIJOINT RJ 80 – 3D VIEW

MODULES ON THE DECK – CUT AT THE FRONT

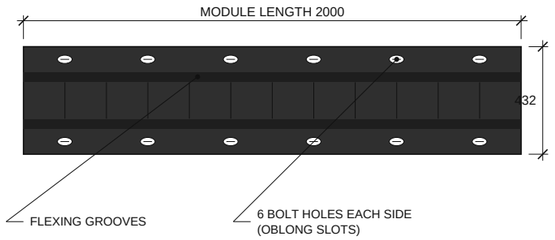

3 PLAN – ONE MODULE (RJ 80)

BOLT HOLES AS SUPPLIED – SKEW ANGLES AVAILABLE

MOVEMENT (TOTAL) BELOW EACH MODEL

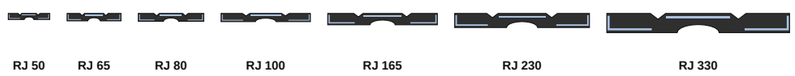

RJ 50	RJ 65	RJ 80	RJ 100	RJ 165	RJ 230	RJ 330
50 mm	65 mm	80 mm	102 mm	165 mm	230 mm	330 mm

4 UNIJOINT RJ RANGE

MODULE SECTIONS TO THE SAME SCALE – NOT TO SCALE OVERALL

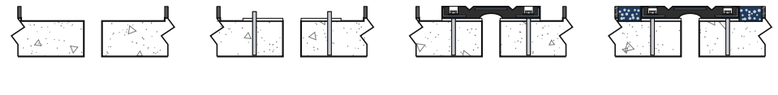

1 CUT & PREPARE
Mark and saw-cut the premix; hack and clean (air blower / hot air).

2 SCREED & STUDS
Levelling mortar; drill holes, fix studs with bonding chemical.

3 FIX MODULES
Place modules, tighten the nuts to the bolt torque (table).

4 NOSING & SEAL
Pour UNISEAL AP77 nosing hot; seal the bolt holes. Traffic when cool.

5 INSTALLATION SEQUENCE

AS TDS – FOLLOW THE SUPPLIER'S INSTRUCTIONS

UNIJOINT RJ – MODEL SELECTION (REFER TO TDS)

MODEL	MOVEMENT (TOTAL) mm	MODULE LENGTH mm	MODULE WIDTH mm	MODULE DEPTH mm	STUD DIA. mm	MODULE WEIGHT kg	MAX. STUD HT. ABOVE SHELF	BOLT TORQUE Nm
RJ 50	50	2000	274	40	12	52	32 mm	45
RJ 65	65	2000	356	49	16	74	40 mm	100
RJ 80	80	2000	432	52	16	96	41 mm	150
RJ 100	102	2000	590	54	20	150	42 mm	175
RJ 165	165	2000	724	75	24	272	51 mm	190
RJ 230	230	2000	890	93	24	375	60 mm	275
RJ 330	330	1220	1207	127	30	451	70 mm	300

Highlighted: RJ 80, shown in Details 1–3. Skew angles available. Dimensions as TDS, subject to change.

GENERAL NOTES (FOR GUIDANCE ONLY)

1. UNIJOINT RJ: steel angles and a steel bridging plate encased in elastomer, supplied in modules bolted to the deck on both sides of the joint (TDS). Select the model for the total movement and skew; joint design by the bridge / structural engineer.
2. Recess, levelling mortar, construction gap, stud embedment and the deck concrete are as per the engineer / supplier.
3. Anchor studs: diameter as the table, grade 8.8, fixed with bonding chemical; spring and oblong washer under each nut.
4. Tighten the nuts to the bolt torque in the table. Stud height above the shelf must not exceed the table value.
5. UNISEAL AP77 nosing (hot-poured binder with heated aggregate, 180 – 200°C, AP77 TDS) between the module and the premix both sides (100 wide, RJ TDS). Seal the bolt holes after torquing.
6. Open to traffic when the UNISEAL AP77 nosing has cooled (AP77 TDS).

LEGEND

- Elastomer (module)
- Embedded steel
- UNISEAL AP77 nosing
- Premix surfacing
- Levelling mortar
- Stud / nut / washer

UNITY RELIANCE (M) SDN BHD
135B, Jalan Kip 8, Kawasan Perindustrian Kepong,
52200 Kuala Lumpur, Malaysia
T: 03-6734 7941 | M: 010-785 1159
unityreliance88@gmail.com | www.unityreliance.com

DISCLAIMER – FOR ILLUSTRATION ONLY, NOT FOR CONSTRUCTION

This drawing is a generic product illustration. It is NOT an engineering design and has not been prepared, checked or endorsed by a professional engineer. Unity Reliance (M) Sdn Bhd is a product supplier, not a design consultant. All sizes, bedding thickness, edge distances, reinforcement, dowels and installation details shall be designed, verified and approved by the project's qualified engineer. Unity Reliance (M) Sdn Bhd accepts no responsibility for structural design, site conditions, workmanship, or any loss or damage arising from the use of this drawing. Product supply is governed by the relevant TDS and terms of sale.

REVISIONS

REV	DATE	DESCRIPTION
0	06/11/26	FIRST ISSUE
A	06/11/26	NOSING CHANGED TO UNISEAL AP77

PRODUCT
UNIJOINT RJ STEEL / ELASTOMER MODULE BRIDGE DECK JOINT RJ 50 – RJ 330

DRAWING TITLE
UNIJOINT RJ MODULE BRIDGE DECK JOINT

DRAWING NO. **UR-JT-05**

REV **A**

SCALE	SIZE	DATE	DRAWN
NTS	A3	06/11/26	UR

FOR ILLUSTRATION ONLY NOT FOR CONSTRUCTION