© 2026 Unity Reliance (M) Sdn Bhd. All rights reserved. Unauthorised reproduction, or use for other brands, is prohibited.

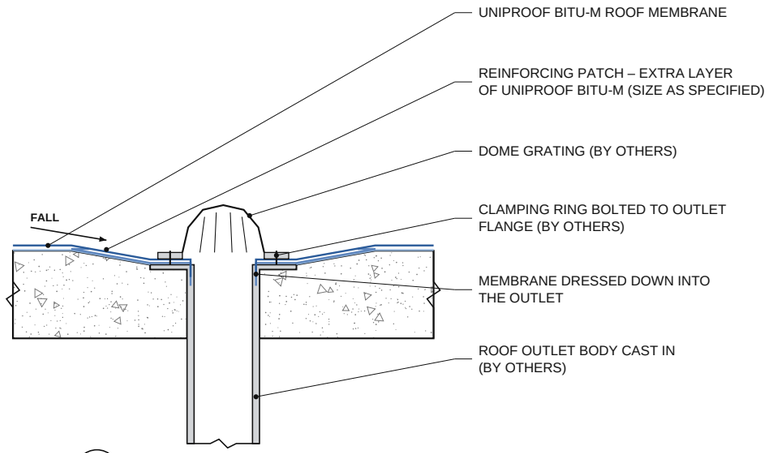

1 INTERNAL ROOF DRAIN

SECTION – NOT TO SCALE

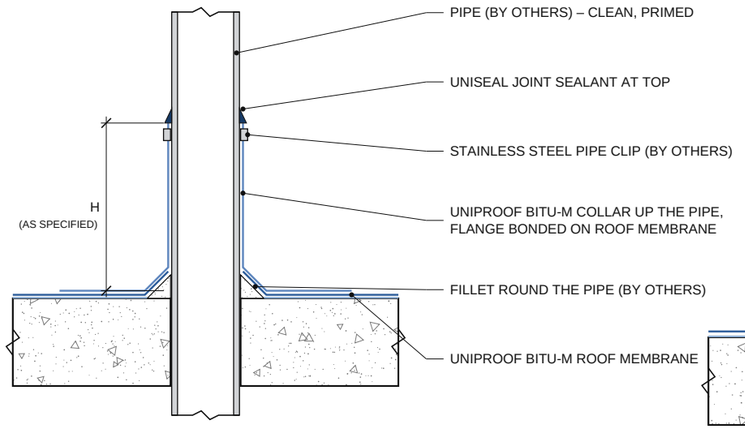

2 PIPE PENETRATION

SECTION – NOT TO SCALE

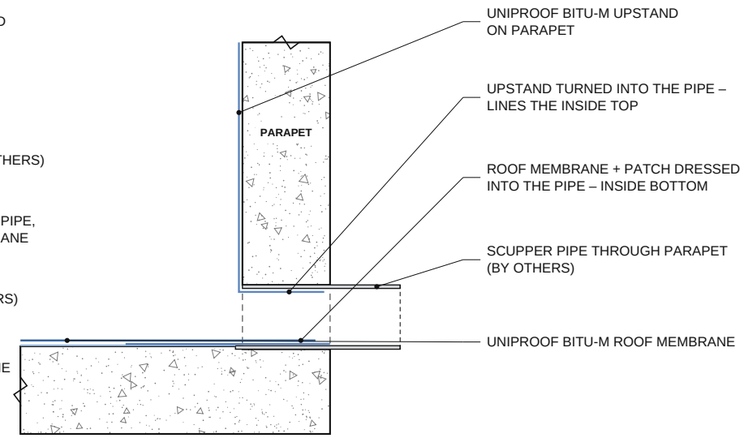

3 SCUPPER OUTLET

SECTION – NOT TO SCALE

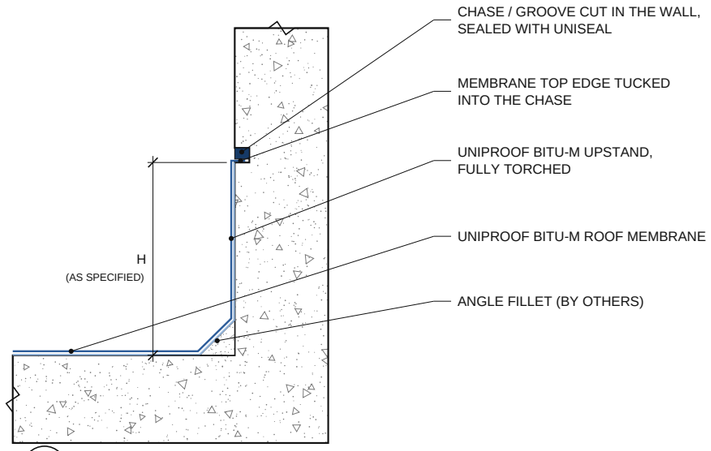

4 FLASHING INTO WALL CHASE

SECTION – NOT TO SCALE

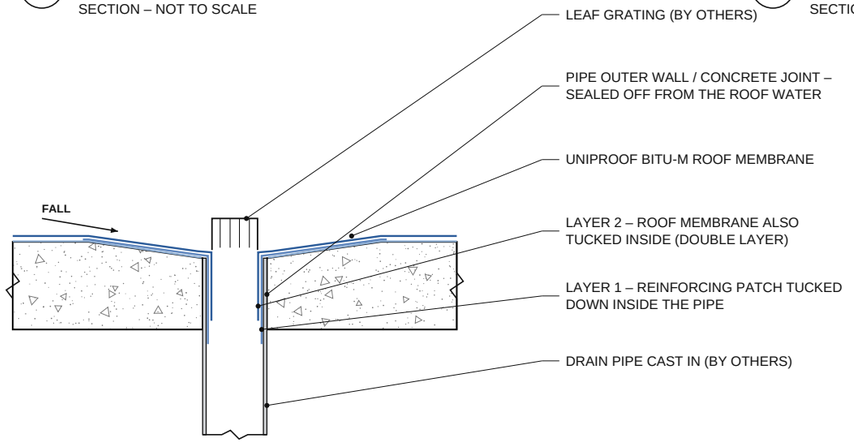

5 PIPE OUTLET DRAIN

SECTION – NOT TO SCALE

LEGEND

- UNIPROOF BITU-M membrane
- UNIPROOF BITU-M patch / collar / strip
- UNICOAT BITUMEN 300 PRIMER
- UNISEAL joint sealant
- Concrete (by others)
- Metal items (by others)

GENERAL NOTES (FOR GUIDANCE ONLY)

1. Product data, priming, laps and laying pattern: see UR-PF-03. Membrane thickness exaggerated for clarity.
2. Outlets, scuppers and penetrations: install the outlet body / sleeve / pipe before waterproofing. Apply a reinforcing patch of UNIPROOF BITU-M first, then the roof membrane over it; dress both into the outlet. Clamp where the outlet has a clamping ring.
3. Pipe collars: cut a piece of UNIPROOF BITU-M to form a flange on the roof membrane and an upstand on the pipe; torch-bond fully, secure the top with a pipe clip and seal with UNISEAL. Pipe surface clean and primed.
4. Upstands at walls: form an angle fillet, take the membrane up to the specified height and tuck the top edge into a chase cut in the wall, sealed with UNISEAL (TDS) – or under a fixed flashing (UR-PF-03).
5. Pipe outlets with no clamping ring: tuck a reinforcing patch and the roof membrane (double layer) down inside the pipe (depth as specified) so water cannot track down between the pipe's outer wall and the concrete. Same at scupper pipes.
6. Outlet sizes, numbers, falls and overflows as per engineer / architect.

UNITY RELIANCE (M) SDN BHD
135B, Jalan Kip 8, Kawasan Perindustrian Kepong,
52200 Kuala Lumpur, Malaysia
T: 03-6734 7941 | M: 010-785 1159
unityreliance88@gmail.com | www.unityreliance.com

DISCLAIMER – FOR ILLUSTRATION ONLY, NOT FOR CONSTRUCTION

This drawing is a generic product illustration. It is NOT an engineering design and has not been prepared, checked or endorsed by a professional engineer. Unity Reliance (M) Sdn Bhd is a product supplier, not a design consultant. All sizes, bedding thickness, edge distances, reinforcement, dowels and installation details shall be designed, verified and approved by the project's qualified engineer. Unity Reliance (M) Sdn Bhd accepts no responsibility for structural design, site conditions, workmanship, or any loss or damage arising from the use of this drawing. Product supply is governed by the relevant TDS and terms of sale.

REVISIONS

REV	DATE	DESCRIPTION
0	29/10/26	FIRST ISSUE AS UR-FX-02
A	14/11/26	RENAMED UNIPROOF BITU-M

PRODUCT
UNIPROOF BITU-M TORCH-ON MEMBRANE
UNICOAT BITUMEN 300 / UNISEAL

DRAWING TITLE
UNIPROOF BITU-M – ROOF DETAILS: OUTLETS, PENETRATIONS & UPSTANDS

DRAWING NO.
UR-PF-04

REV
A

SCALE	SIZE	DATE	DRAWN
NTS	A3	14/11/26	UR

FOR ILLUSTRATION ONLY NOT FOR CONSTRUCTION