UNIFLEX® PE BACKER ROD

CLOSED CELL POLYETHYLENE FILLER



Product Features

UNIFLEX® PE BACKER ROD is a non-extruding, non-absorbent, highly resilient, bitumen-free, closed cell polyethylene backing rod. It is used as a backing material for cold-applied elastomeric joint sealants, to give a watertight and airtight seal in expansion and movement joints in concrete, brickwork, blockwork and masonry.

UNIFLEX® PE BACKER ROD supports the sealant and sets its depth, so the sealant is applied at the correct width-to-depth ratio. The sealant does not bond to the rod, which prevents three-sided adhesion and leaves the sealant free to stretch and compress with the joint.

UNIFLEX® PE BACKER ROD is rot-proof and has high compression and recovery, so it stays tight in the joint as the joint opens and closes with thermal and structural movement.

SUITABLE FOR DRINKING WATER CONTACT
Tested to MS 1583 and cytotoxicity test · SPAN approved

Advantages

- Control joint depths and ensures a proper width to depth ratio
- Non-absorbent surface eliminates three-side adhesion of the elastomeric sealant
- Bitumen free and rot proof, ideal for water retaining structures
- Closed cell structure does not allow the absorption of moisture or air
- Fully compatible with a wide variety of sealants
- Efficient and cost-effective

Fields of Application

Brickworks, Blockworks & Masonry	Curtain Walls
Expansion, Isolation & Control Joints	Pre-cast Panels
Highway & Pavements Joints	Window & Door Applications
Parking Decks	Repairs Work

© 2026 Unity Reliance (M) Sdn Bhd. All rights reserved. Unauthorised reproduction, or use for other brands, is prohibited.

UNIFLEX® PE BACKER ROD

Technical Properties

Property	Unit	Result
Density	kg/m³	40
Longitudinal Elongation	%	15
Elasticity	%	10
Water Absorption	-	Nil
Resistance to Solvents	-	Good
Resistance to Deformation	-	Excellent
Dimensional Stability	-	Excellent
Service Temperature	°C	-40 to +80

Typical values, subject to 5-10% tolerance.

Physical Properties

Material	:	Closed Cell Polyethylene (PE)
Colour	:	Grey
Size	:	10mm - 400m / box 15mm - 150m / box 20mm - 100m / box 25mm - 100m / box 30mm - 50m / box 40mm - 2m / length (25 lengths, 50m / box) 50mm - 2m / length (25 lengths, 50m / box) *(other sizes available upon request)
Packaging	:	Boxed (quantity per box as listed above)
Weight	:	Dependent upon sizes

This technical data sheet is given in good faith and does not guarantee the application work.
All Unity Reliance technical data sheets & method statements are updated on a regular basis and can be subject to change without notice.
It is the user's responsibility to obtain the latest version of the information required.

© 2026 Unity Reliance (M) Sdn Bhd. All rights reserved. Unauthorised reproduction, or use for other brands, is prohibited.

UNIFLEX® PE BACKER ROD

Typical Drawing & Profiles

1 SLAB ON GROUND — Not to scale

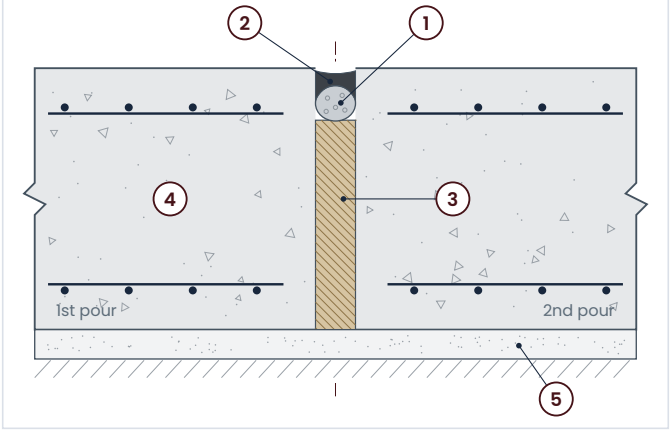

2 SUSPENDED SLAB & WALL — Not to scale

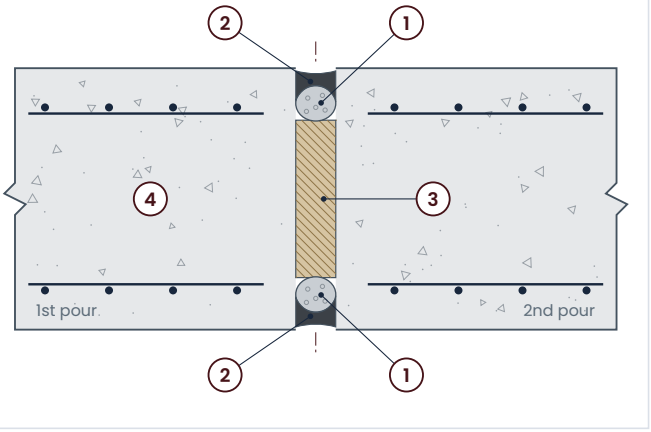

LEGEND

1. UNIFLEX® PE Backer Rod
2. UNISEAL® joint sealant
3. UNIFLEX® filler board
4. Reinforced concrete
5. Lean concrete

Illustrations only – not for construction.

Application Photos





© 2026 Unity Reliance (M) Sdn Bhd. All rights reserved. Unauthorised reproduction, or use for other brands, is prohibited.

UNIFLEX® PE BACKER ROD

Installation Procedures

1 Preparation | 2 Application | 3 Joint Sealing

Installation Procedures

Step 1
PREPARATION

For expansion joints in new concrete, brickwork, blockwork and masonry, construct both sides of the joint prior to fixing **UNIFLEX® PE BACKER ROD.**

The joint surface must be **clean, dry and free from oil, loose particles, cement laitance and other contaminants** which may affect the adhesion.

Thorough wire brushing, grinding, sand blasting or solvent cleaning may be required to expose a clean and sound substrate. Remove sharp edges and corners that could puncture or damage the backer rod.

Step 2
APPLICATION

Select a **UNIFLEX® PE BACKER ROD** with a diameter about **25%** greater than the width of the joint. This keeps the rod in compression and in place while the sealant is applied.

Cut **UNIFLEX® PE BACKER ROD** to the length of the joint with a sharp knife. Press it into the joint with a blunt tool to the level that leaves a slot of the specified sealant depth. Do not puncture, stretch or twist the rod.

Step 3
JOINT SEALING

After the sealing slot has been created, seal the joint with an appropriate sealant from the **UNISEAL®** range.

Shelf Life & Storage

UNIFLEX® PE BACKER ROD has a shelf life of **12 months** when stored under cover in its original packaging, in a dry place away from direct sunlight, heat and sources of ignition.

Health & Safety

UNIFLEX® PE BACKER ROD presents no health hazard in normal handling and use. Wear gloves and goggles when cutting, and follow normal site safety practice.

This technical data sheet is given in good faith and does not guarantee the application work.
All Unity Reliance technical data sheets & method statements are updated on a regular basis and can be subject to change without notice.
It is the user's responsibility to obtain the latest version of the information required.

© 2026 Unity Reliance (M) Sdn Bhd. All rights reserved. Unauthorised reproduction, or use for other brands, is prohibited.



No.135B, Jalan Kip 8,
Kawasan Perindustrian Kepong
52200 Kuala Lumpur

(+60) 3-6734 7941
(+60) 10-785 1159

enquiry@unityreliance.com
https://www.unityreliance.com

© 2026 Unity Reliance (M) Sdn Bhd. All rights reserved. Unauthorised reproduction, or use for other brands, is prohibited.