UNIJOINT FLEXSEAL

MULTI-PURPOSE EXPANSION JOINT SEAL
FLOOR TO FLOOR | FLOOR & WALL TO WALL

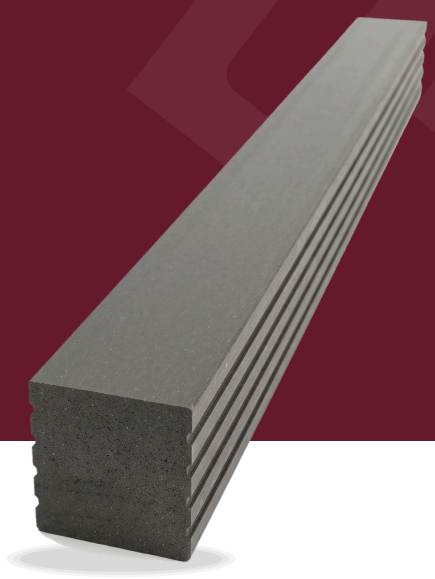

Product Features

UNIJOINT FLEXSEAL is a multi-purpose seal for expansion joints, for floor-to-floor, floor-to-wall and wall-to-wall applications. Bonded to both joint faces with **UNISTICK EA 5537** epoxy adhesive, it forms a continuous, watertight seal with a smooth surface that sits flush with the finishes.

Unlike standard seals supplied in a fixed range of sizes, **UNIJOINT FLEXSEAL** is produced to the measured width of each joint, including wide joints of 150 mm and above. One system can therefore seal every joint on a project, from narrow building joints to wide structural gaps.

Seals are supplied in 1 m lengths and butt-jointed on site with **UNISTICK CA** contact adhesive to form a continuous run of any length.

Advantages

Made to Measure: Produced to the exact joint width, including joints of 150 mm and above.
High Movement Capacity: Accommodates movement of ±40% of the gap width (80% total).
Load Rated: Rated for car, reach truck and truck loads (Eurocode) on joints up to 63 mm.
Watertight Bond: Bonded to both joint faces with UNISTICK EA 5537 epoxy adhesive.
Smooth & Flush: Sits level with the surrounding finish for a clean, unobtrusive sightline.
Continuous Runs: 1 m lengths butt-jointed with UNISTICK CA for runs of any length.

Fields of Application

Building Expansion Joints	Wide Joints (150 mm & Above)
Floor-to-Floor Joints	Commercial Buildings & Malls
Floor-to-Wall Joints	Hospitals & Institutional Buildings
Wall-to-Wall Joints	Airports & Transport Terminals
Podium & Roof Slab Joints	Car Parks, Factories & Warehouses

© 2026 Unity Reliance (M) Sdn Bhd. All rights reserved. Unauthorised reproduction, or use for other brands, is prohibited.

Expansion Joint Selection Criteria

UNIJOINT FLEXSEAL : FLOOR TO FLOOR

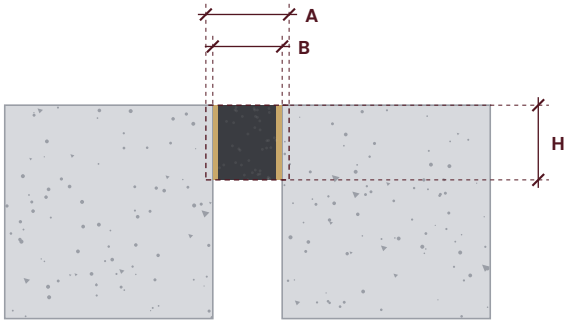

UNIJOINT FLEXSEAL : FLOOR TO WALL

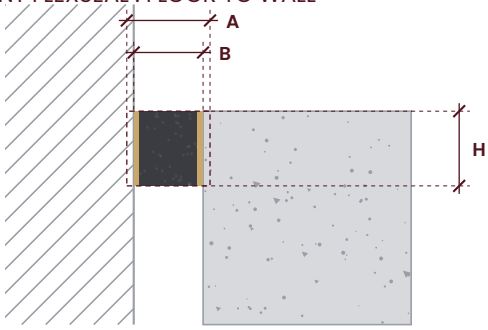

UNIJOINT FLEXSEAL UNISTICK EA 5537 epoxy adhesive Concrete substrate

B = Gap width A = Seal width supplied (10–20% wider than B, dashed; installed in compression) H = Seal height

			Load Rating (Eurocode)				Product Dimensions		
Joint Location	**Gap** B (mm)	**Movement** ± [Total]	Pallet Truck	Reach Truck	Car	Truck	**Height** H (mm)	**Seal Width** A (mm)	**Product Code**
Floor – Floor Floor – Wall Wall – Wall	10	± 4 [8]	–	**34 kN**	**32 kN**	**650 kN**	25	15	UJ-FS-010-025
	20	± 8 [16]						25	UJ-FS-020-025
	25	± 10 [20]						30	UJ-FS-025-025
	30	± 12 [24]					50	35	UJ-FS-030-050
	38	± 15 [30]						45	UJ-FS-038-050
	44	± 18 [35]						50	UJ-FS-044-050
	50	± 20 [40]						55	UJ-FS-050-050
	57	± 23 [46]		–			64	65	UJ-FS-057-064
	63	± 25 [50]						70	UJ-FS-063-064
	70	± 28 [56]			–	–		80	UJ-FS-070-064
	75	± 30 [60]		–			76	85	UJ-FS-075-076
	83	± 33 [66]						95	UJ-FS-083-076
	90	± 36 [72]						100	UJ-FS-090-076
	95	± 38 [76]					89	105	UJ-FS-095-089
	100	± 40 [80]						110	UJ-FS-100-089
	> 100	**± 40% [80%]**	**–**	**–**	**–**	**–**	**Made to order**		**Made to order**

Seal width A is a nominal size: seals are made 10–20% wider than gap B and installed in compression. Load ratings are based on supplier data, at vehicle speeds not exceeding 16 km/h (10 mph). Joint widths above 100 mm, including 150 mm and above, are made to order. Supplied in 1 m lengths.

This technical data sheet is given in good faith and does not guarantee the application work. All Unity Reliance technical data sheets & method statements are updated on a regular basis and can be subject to change without notice. It is the user's responsibility to obtain the latest version of the information required.

© 2026 Unity Reliance (M) Sdn Bhd. All rights reserved. Unauthorised reproduction, or use for other brands, is prohibited.

Technical Properties

Property	Test Method	Unit	Value
Density	ASTM D792	kg/m³	28 ± 10%
Tensile Strength at Break	ASTM D412	kgf/cm²	5.1 (≈ 0.50 MPa)
Elongation at Break	ASTM D412	%	180
Hardness	JIS K7312	Shore C	16 ± 3
Compression Deflection	ASTM D1056	kgf	3.4
Movement Capacity	–	% of gap width	± 40 (80 total)

Typical values, given as a guide only and not as a specification.

Physical Properties

Material	:	Closed-cell foam
Colour	:	Charcoal grey
Gap Width	:	Made to measure to suit joint width, including 150 mm and above
Length	:	1 m / length
Surface	:	Smooth, flush with finishes
Bonding Adhesive	:	UNISTICK EA 5537 epoxy adhesive (to joint faces)
Butt-Joint Adhesive	:	UNISTICK CA contact adhesive (between lengths)
Fire Retardant	:	UNIFLEX PE FR material, on special request
Supply	:	Made to order

Ordering Information

1. Gap width (B): measure at several points along the joint and state the narrowest and widest. The seal is supplied 10–20% wider (A).
2. Seal height (H): select from the Selection Criteria table, or state the height required for joints above 100 mm.
3. Total run length: seals are supplied in 1 m lengths.
4. Joint location: floor-to-floor, floor-to-wall or wall-to-wall.

This technical data sheet is given in good faith and does not guarantee the application work. All Unity Reliance technical data sheets & method statements are updated on a regular basis and can be subject to change without notice. It is the user's responsibility to obtain the latest version of the information required.

© 2026 Unity Reliance (M) Sdn Bhd. All rights reserved. Unauthorised reproduction, or use for other brands, is prohibited.

Butt Jointing of Lengths

PLAN VIEW

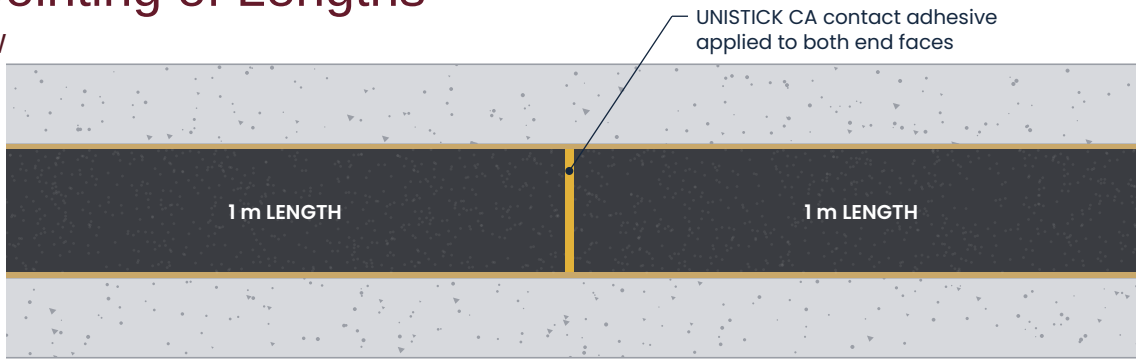

Drawings are for illustration only and are not to scale. Joint width and movement must be determined by the project engineer. Unity Reliance does not accept design responsibility for joint details.

Health & Safety

UNISTICK EA 5537 and **UNISTICK CA** are chemical products. Wear gloves, goggles and protective clothing during mixing and application, and avoid contact with skin and eyes. If contact occurs, rinse immediately with clean water and seek medical attention.

UNISTICK CA is solvent based and flammable. Use only in well-ventilated areas away from naked flames, sparks and heat. Refer to the Safety Data Sheet (SDS) of each adhesive for full health and safety information.

Take care when trimming the foam on site with a knife.

Shelf Life & Storage

Store **UNIJOINT FLEXSEAL** flat in its original packaging in a cool, dry and shaded place. Do not bend the seals or stack heavy loads on them, as permanent deformation may affect the fit in the joint.

Store the adhesives in accordance with their own technical data sheets.

This technical data sheet is given in good faith and does not guarantee the application work. All Unity Reliance technical data sheets & method statements are updated on a regular basis and can be subject to change without notice. It is the user's responsibility to obtain the latest version of the information required.

© 2026 Unity Reliance (M) Sdn Bhd. All rights reserved. Unauthorised reproduction, or use for other brands, is prohibited.

Installation Procedures

1 Surface Preparation | 2 Adhesive Application | 3 Installation | 4 Butt Jointing

Installation Procedures

Step 1

SURFACE PREPARATION

All joint faces must be structurally sound, clean, dry and free from dust, laitance, oil, curing compounds and loose particles. Grind or wire-brush the joint faces and remove all dust by vacuum or oil-free compressed air.

Check the joint width along its full length against the seal size ordered, and remove any debris, mortar or formwork from the joint.

Mask the top edges of the joint with tape to keep the finished surface clean.

Step 2

ADHESIVE APPLICATION

Mix **UNISTICK EA 5537** Part A and Part B thoroughly in accordance with its technical data sheet.

Apply an even coat of the mixed adhesive to both joint faces over the full depth of the seal, and to both sides of the seal.

Install the seal within the working time of the adhesive.

Step 3

INSTALLATION

Press **UNIJOINT FLEXSEAL** into the joint so that its top surface is flush with the finished surface. Work along the joint from one end, making sure the seal is in full contact with the adhesive on both faces.

Remove excess adhesive from the surface before it cures, then remove the masking tape.

Protect the joint from traffic, water and loading until the adhesive has fully cured.

Step 4

BUTT JOINTING

Before inserting each new length, apply **UNISTICK CA** to the end faces of both lengths to be joined and allow it to become touch-dry.

Press the ends firmly together with the faces aligned. Contact adhesive bonds on contact, so position the ends accurately before pressing.

Install the joined length as described in Step 3. On completion, inspect the full run for gaps at the butt joints and along both bond lines.

This technical data sheet is given in good faith and does not guarantee the application work. All Unity Reliance technical data sheets & method statements are updated on a regular basis and can be subject to change without notice. It is the user's responsibility to obtain the latest version of the information required.

© 2026 Unity Reliance (M) Sdn Bhd. All rights reserved. Unauthorised reproduction, or use for other brands, is prohibited.



No.135B, Jalan Kip 8,
Kawasan Perindustrian Kepong
52200 Kuala Lumpur

(+60) 3-6734 7941
(+60) 10-785 1159

enquiry@unityreliance.com
https://www.unityreliance.com

© 2026 Unity Reliance (M) Sdn Bhd. All rights reserved. Unauthorised reproduction, or use for other brands, is prohibited.