UNISEAL® BITUFLEX

HOT-POURED RUBBER BITUMEN JOINT SEALANT



Product Features

UNISEAL® BITUFLEX is a high performance hot-applied rubberised bituminous joint sealant compound formulated to meet today's requirement for quality, cost-effective bridge expansion joint, road and runway maintenance.

UNISEAL® BITUFLEX is designed to provide a resilient, flexible and watertight seal throughout repeated cycles of expansion and contraction of the joint. The material exhibits superior flow resistance throughout a wide range of temperatures, whilst its low viscosity ensures ease of installation. Additional adhesion-promoting agents obviate the requirement for a primer under all normal circumstances.

Advantages

- No primer required
- Resistant to weathering
- Low viscosity for easy installation
- Prevents entry of water and foreign bodies
- Superior flow resistance with improved and sustained low and high temperature flexibility

Fields of Application

Ideal for installation of bridge expansion joint and the sealing of horizontal and gently sloping construction, expansion and contraction joints in concrete and asphalt roads, runways and thoroughfares.

- Roads
- Bridges
- Toll plaza
- Floor joints in tunnel / subway
- Pavements, roads and traffic surfaces
- Runways and airfield pavements

© 2026 Unity Reliance (M) Sdn Bhd. All rights reserved. Unauthorised reproduction, or use for other brands, is prohibited.

Technical Properties

Property	Test Method	Unit Measurement	Values
Cone Penetration (25°C)	ASTM D5329	dmm	< 40
Flow Resistance (60°C, 5 h)	ASTM D5329	mm	< 1
Softening Point (Ring & Ball)	ASTM D36	°C	> 95
Bond, 3 cycles to 100% at -7°C	ASTM D5329	-	Pass

Physical Properties

Material	:	Rubberised Bitumen
Colour	:	Black
Form	:	Solid
Density	:	1.4
Packing	:	17 kg / can
Shelf Life	:	24 months (unopened, dry storage)

Theoretical Coverage Rates

Joint depth (mm)	Joint width (mm)						
	13	15	20	25	30	35	40
20	0.30	0.35	0.47	0.59	0.70	0.82	0.94
25	–	–	–	0.76	0.91	1.06	1.22
30	–	–	–	–	1.12	1.30	1.49
35	–	–	–	–	–	1.54	1.77
40	–	–	–	–	–	–	2.04

Values in kg per linear metre of joint. Theoretical – allow for site wastage.

Site Photos



© 2026 Unity Reliance (M) Sdn Bhd. All rights reserved. Unauthorised reproduction, or use for other brands, is prohibited.

Installation Procedures

1 Joint Preparation | 2 Backer Rod | 3 Heating | 4 Pouring

Step 1
JOINT PREPARATION

Joints to be installed or sealed should be thoroughly cleaned and dried, preferably with a hot compressed air lance, or by grit blasting or power brushing, to remove all detritus and, where applicable, old sealant. Any necessary repairs to badly spalled concrete joints should be completed before sealing. The joint must be dry when the sealant is poured.

Step 2
BACKER ROD

Caulking or a backer rod may be inserted into the joint gap before the sealant is installed, to set the depth of the sealant. No primer is required under normal circumstances, as the compound contains adhesion-promoting agents. For bridge expansion joint systems, complete installation instructions are available separately on request.

Step 3
HEATING

Heat and agitate **UNISEAL® BITUFLEX** in a purpose-built sealant pre-heater unit, ensuring that the temperature does not exceed 200°C. Keep water away from the hot material at all times.

Step 4
POURING

Pump **UNISEAL® BITUFLEX** into the joint, or pour it using a bucket and "V" mould, with the minimum loss of temperature. Joints in concrete should be sealed to a level approximately 1.5mm to 3mm below the surface, so that traffic does not pick up the sealant.

Important Notes

- Keep working areas well ventilated
- Suitable protective clothing should be worn when handling hot materials. Gloves should be worn at all times and face shields if there is a danger of splashing
- Do not allow water to contact hot materials
- Do not exceed recommended maximum temperature
- If molten material contacts skin do not attempt to remove. Seek medical advice without delay

This technical data sheet is given in good faith and does not guarantee the application work.
All Unity Reliance technical data sheets & method statements are updated on a regular basis and can be subject to change without notice.
It is the user's responsibility to obtain the latest version of the information required.

© 2026 Unity Reliance (M) Sdn Bhd. All rights reserved. Unauthorised reproduction, or use for other brands, is prohibited.

Typical Applications

1 SAWN JOINT – RESERVOIR CUT

Contraction joint

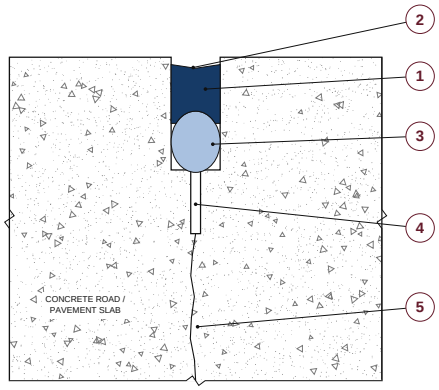

2 EXPANSION JOINT

Slab on grade

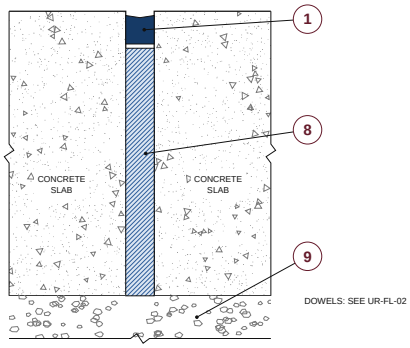

3 POURING THE JOINT

3D view

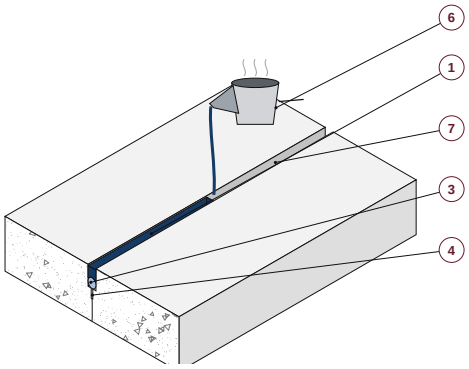

4 INSTALLATION STEPS

Not to scale

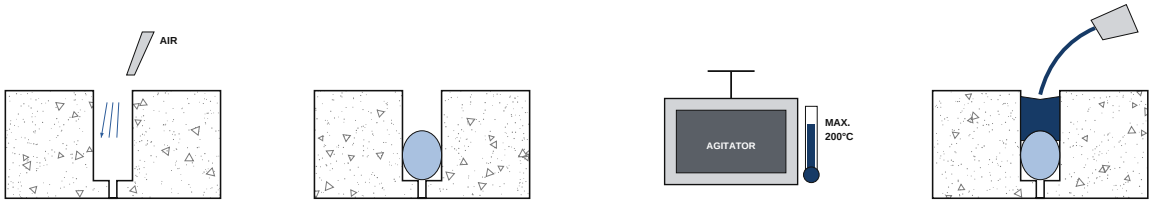

1 STEP 1 – CLEAN & DRY
Hot compressed-air lance, grit blast or power brush. Remove old sealant, repair spalled arrises.

2 STEP 2 – BACKER ROD
Insert the backer rod to the specified sealant depth. Reservoir must be dry before pouring.

3 STEP 3 – HEAT
Purpose-built pre-heater with agitator. Never exceed 200°C. Keep water away from hot material.

4 STEP 4 – POUR
Pump or pour (bucket + V mould) with minimum heat loss, to 1.5 – 3mm below the surface.

LEGEND

1. UNISEAL® BITUFLEX, poured hot
2. Top 1.5 – 3 mm below surface
3. Backer rod (sets depth)
4. Initial saw cut (by others)
5. Contraction crack
6. Pouring bucket / pump
7. Clean, dry reservoir
8. UNIFLEX® PE fillerboard
9. Sub-base (by others)

Illustrations only – not for construction. No primer required under normal conditions. Refer to drawing UR-SL-02.

© 2026 Unity Reliance (M) Sdn Bhd. All rights reserved. Unauthorised reproduction, or use for other brands, is prohibited.



No.135B, Jalan Kip 8,
Kawasan Perindustrian Kepong
52200 Kuala Lumpur

(+60) 3-6734 7941
(+60) 10-785 1159

enquiry@unityreliance.com
https://www.unityreliance.com

© 2026 Unity Reliance (M) Sdn Bhd. All rights reserved. Unauthorised reproduction, or use for other brands, is prohibited.